CPRM

# TESTES PARA APLICAÇÃO DE PERFILAGEM GEOFÍSICA EM FUROS DE SONDAGEM NA ÁREA DE CARAJÁS

Junho 1986

Geofísico ANTONIO CARLOS G.M. DE GODOY
Engº Eletrônico PENIDO STELLA

1916
CPRM — DIDOTE
ARQUIVO TÉCNICO
Relatorio n.º 1836
N.º de Volumes: 1 V: S
PHL-010257

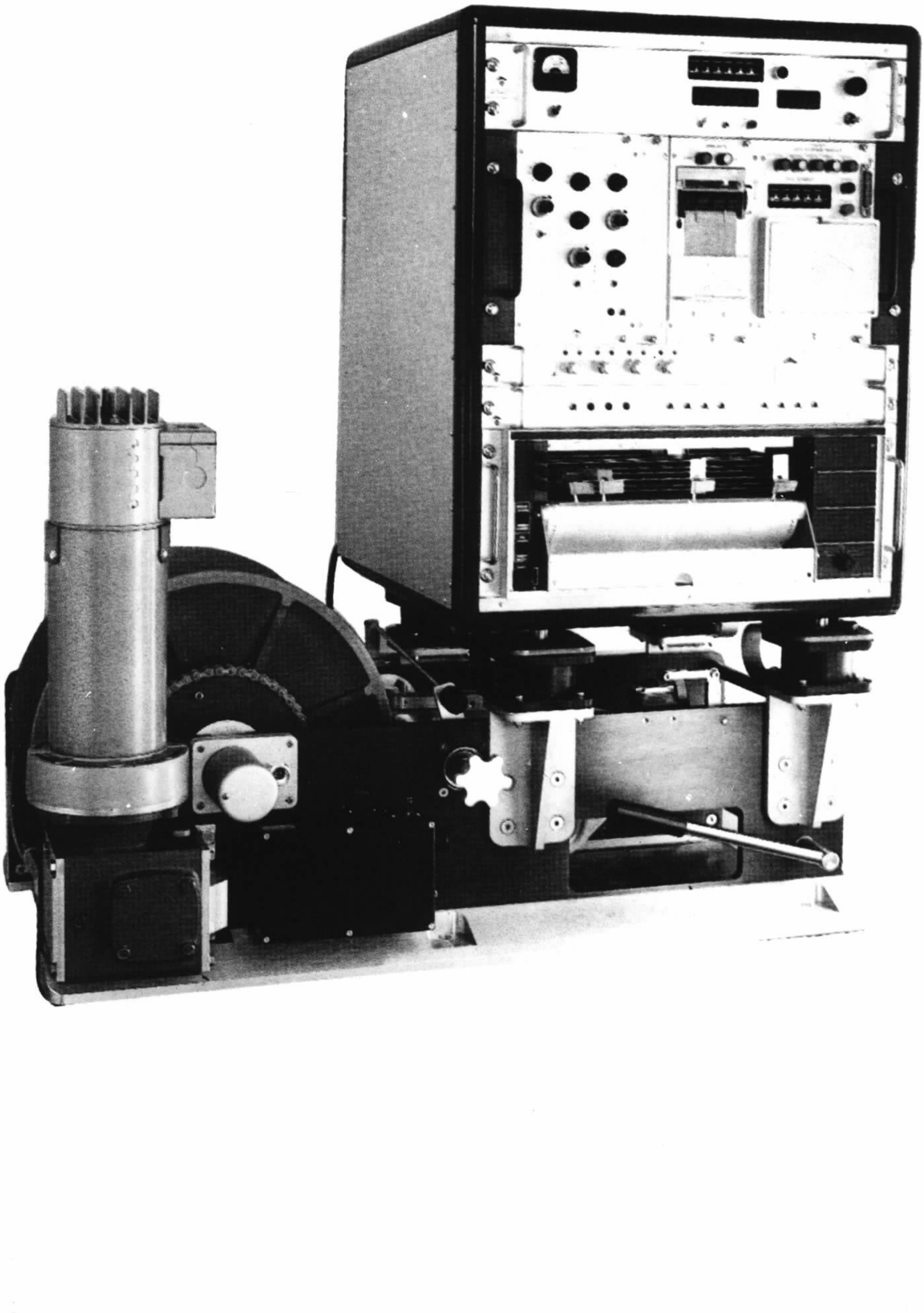

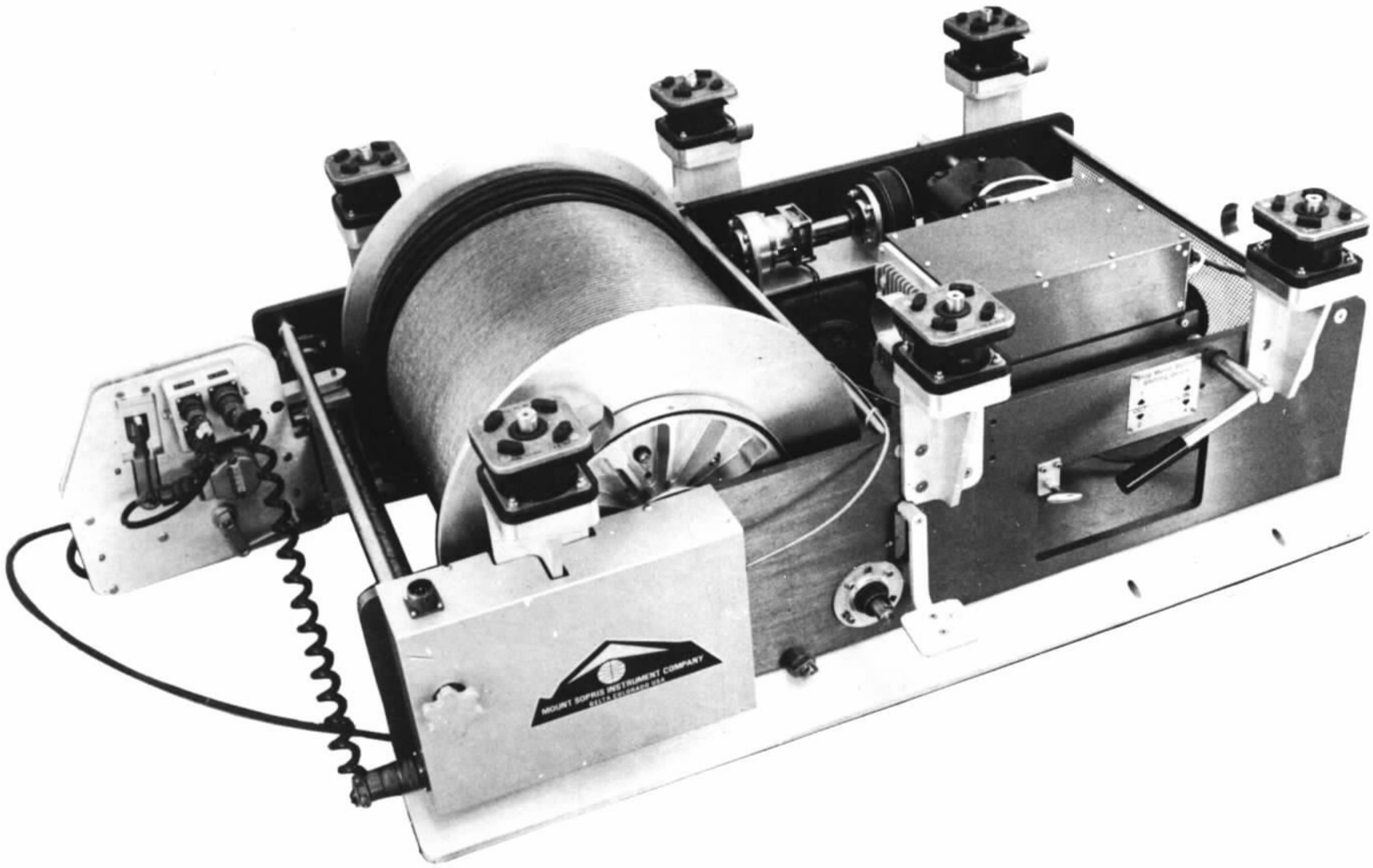
MOUNT SOPRIS INSTRUMENT COMPANY

CPRM

S U M Ā R I O


1. INTRODUÇÃO

2. EQUIPAMENTOS

3. MÉTODOS GEOFÍSICOS
   3.1 - Radiação Gama
   3.2 - Potencial Espontâneo
   3.3 - Resistência
   3.4 - Resistividade
   3.5 - Polarização Induzida

4. OPERAÇÃO

5. PROFUNDIDADE

6. OPERAÇÕES EFETUADAS

7. RESULTADOS
   7.1 - Resultados Positivos
      7.1.1 - Identificação de Zonas Anômalas
      7.1.2 - Empacotamento da Seção
      7.1.3 - Correlação entre Perfis
      7.1.4 - Auxílio à Descrição de Testemunhos
      7.1.5 - Controle da Profundidade
      7.1.6 - Definição de Escalas dos Registros
      7.1.7 - Outros
   7.2 - Resultados Pendentes
      7.2.1 - Raio de Investigação
      7.2.2 - Correlação com Geologia

8. CONCLUSÕES

9. AGRADECIMENTOS

10. REFERÊNCIAS

11. ANEXOS

## 1. INTRODUÇÃO

O objeto deste Relatório é a apresentação dos resultados dos testes experimentais executados pela CPRM e DOCEGEO, objetivando a utilização de métodos geofísicos em furos de sondagem, para pesquisa de minerais metálicos.

Os trabalhos foram realizados em áreas de pesquisa da DOCEGEO e tiveram como suporte administrativo os seguintes documentos:

- Carta nº 015/SUMERC/86, de 19.02.86, onde a CPRM propõe à DOCEGEO execução dos testes e condições;
- Telex nº 030/SUMERC/86, de 25.03.86, onde a CPRM reapresenta as condições de custos, em cruzados;
- Telex DOCEGEO nº 0321/86 de 02.04.86, onde a DOCEGEO aceita as condições para execução dos testes.

Os testes foram executados em quatro poços, dois situados no Corpo 3A da jazida de cobre de Salobo e os demais no Corpo Quatro da área de Pojuca, todos na Província de Carajás.

## 2. EQUIPAMENTOS

Utilizou-se um sistema de perfilagem MS-3000, fabricado pela Mount Sopris Instruments CO. dos Estados Unidos, com capacidade para perfilar até 1000 m de profundidade e composto pelas seguintes partes:

- um sistema de guincho
- módulos para os seguintes métodos geofísicos:
  a. Polarização Induzida (IP), Potencial Espontâneo Diferencial (DSP) e Resistividade ($\rho$)
  b. Radiação Gama ($\gamma$)
  c. Resistência (R)
  d. Potencial Espontâneo (SP)
  e. Sonda de perfilagem para os métodos IP, DSP e $\rho$
  f. Sonda de perfilagem para os métodos $\gamma$, R e SP
  g. Registrador analógico para três canais

A energia, tanto para o guincho quanto para os equipamentos, foi fornecida por um gerador Honda de 2 KVA; entretanto, o sistema pode operar com qualquer fonte externa de 110 V, 60 Hz.

As figuras 1 e 2 mostram o esquema das duas sondas de perfilagem utilizadas.

## 3. MÉTODOS GEOFÍSICOS

Nesse capítulo apresentar-se-á uma descrição sumária de cada um dos métodos geofísicos utilizados no teste.

As figuras 3 e 4 mostram, esquematicamente, como são obtidos os registros $\gamma$ , R, SP e IP, DSP, $\rho$ .

### 3.1 - Radiação Gama

O método mede a radiação natural emitida pelos átomos dos minerais das rochas atravessadas pela perfuração.

A radiação é registrada em faixa de energia que engloba emissões provenientes das famílias radioativas do tório, urânio ou potássio.

O detetor consiste em um cristal de 1/2 x 3/2 $pol^3$ ativado a tálio que, ao ser atingido por uma radiação, emite um fóton de luz. Os fótons são ampliados através célula fotomultiplicadora que os transformam em pulsos elétricos que são percebidos por circuitos eletrônicos. A quantidade de pulsos elétricos será proporcional à radiação gama, sendo essa a informação geofísica registrada, refletindo as características das rochas situadas ao redor do sensor (cristal). Em perfilagem, o detetor situa-se na sonda.

### 3.2 - Potencial Espontâneo

Mede-se a diferença de potencial elétrico naturalmente existente na natureza entre dois pontos: um considerado referência, normalmente na superfície, e outro variável ao longo do poço (eletrodos A e B na Fig. 3).

# SONDA GAMA, R, SP

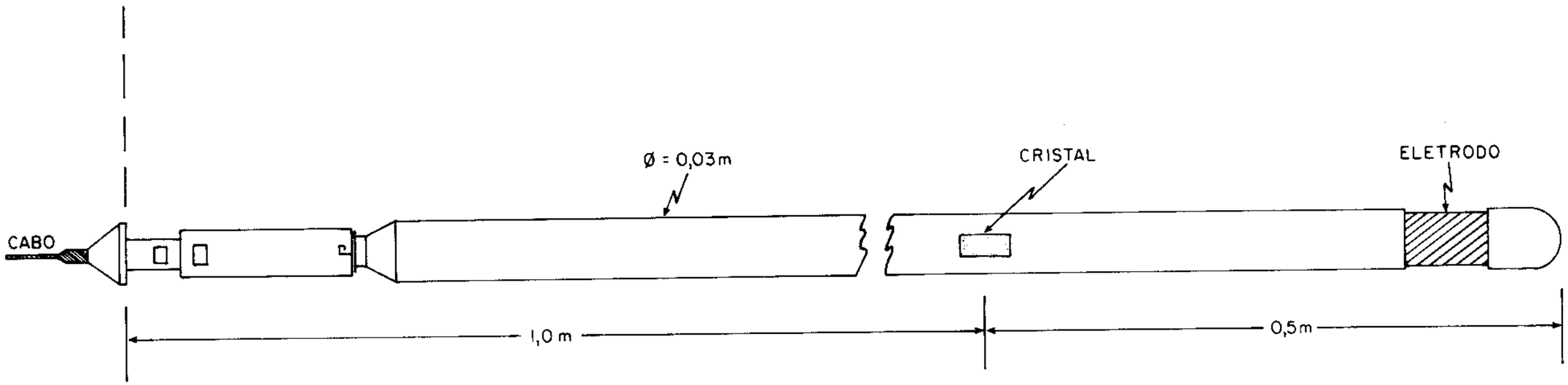


FIG. 01

SONDA IP-RESISTIVIDADE-SP

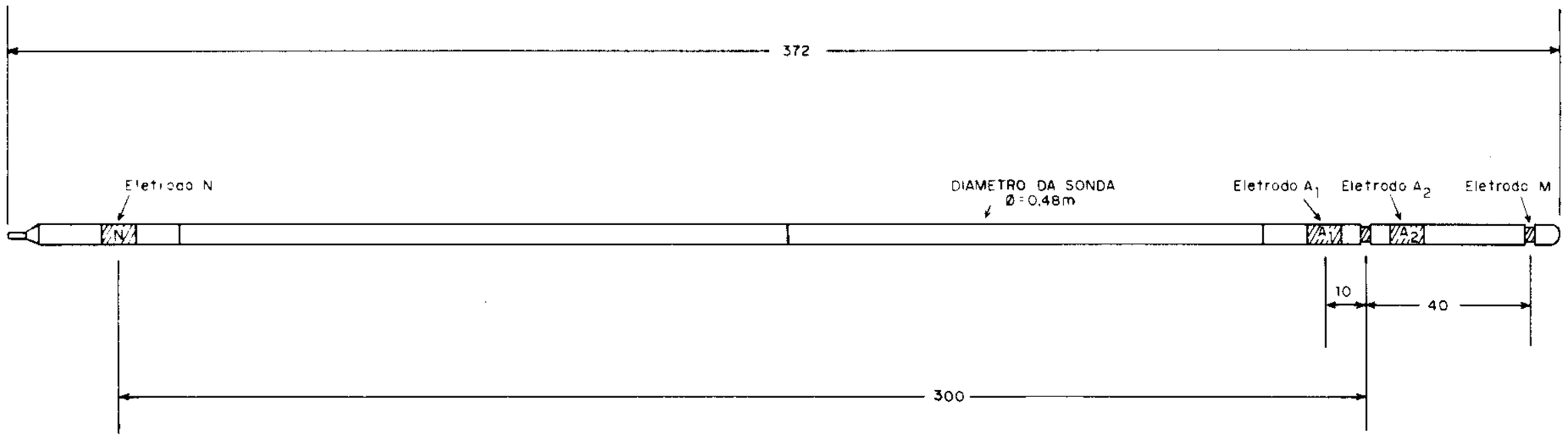


TODAS AS MEDIDAS ESTÃO EM CENTIMETROS

FIG. 02

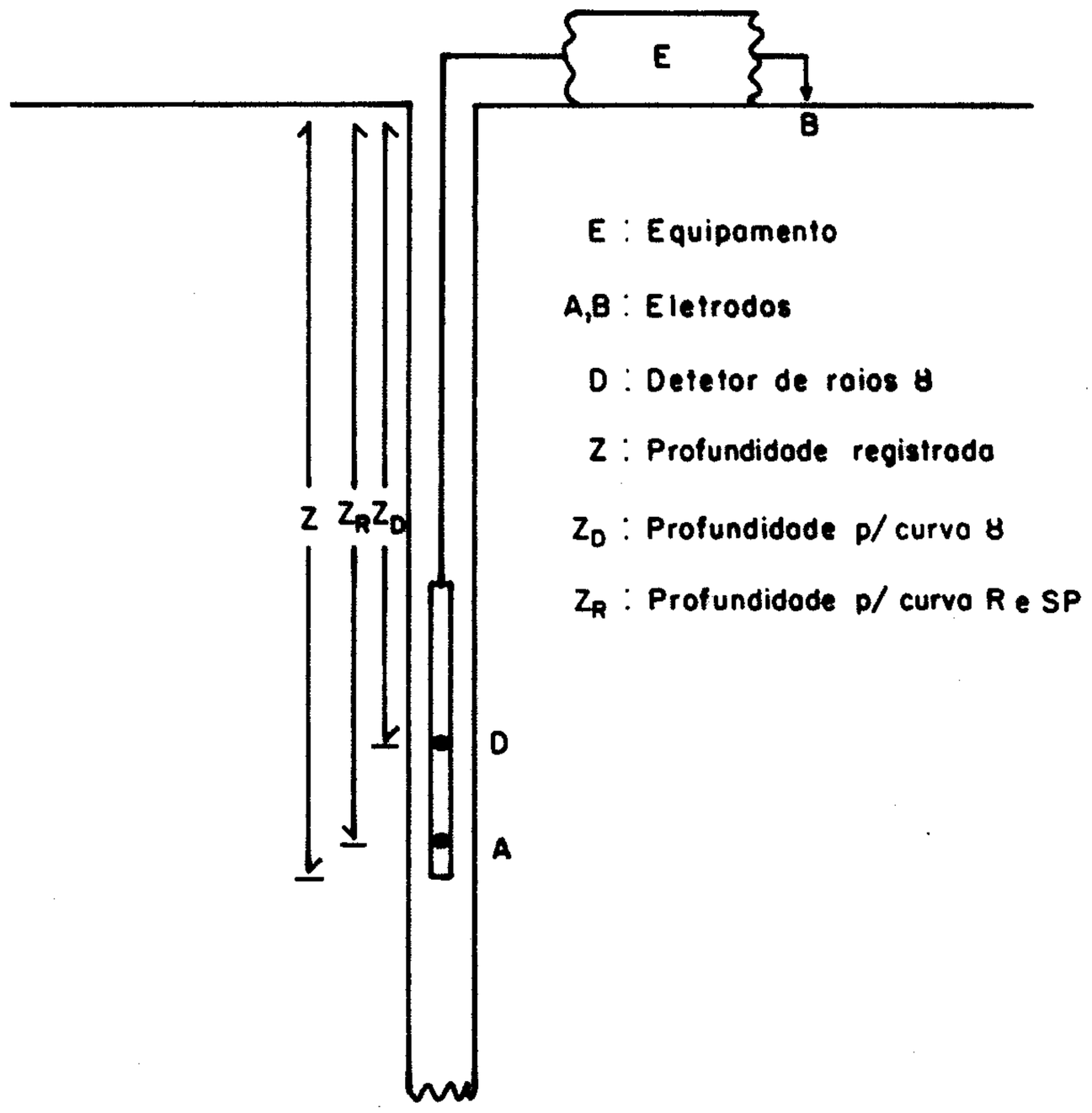


ESQUEMA PARA PERFILAGEM 8, R e SP

FIG. 03

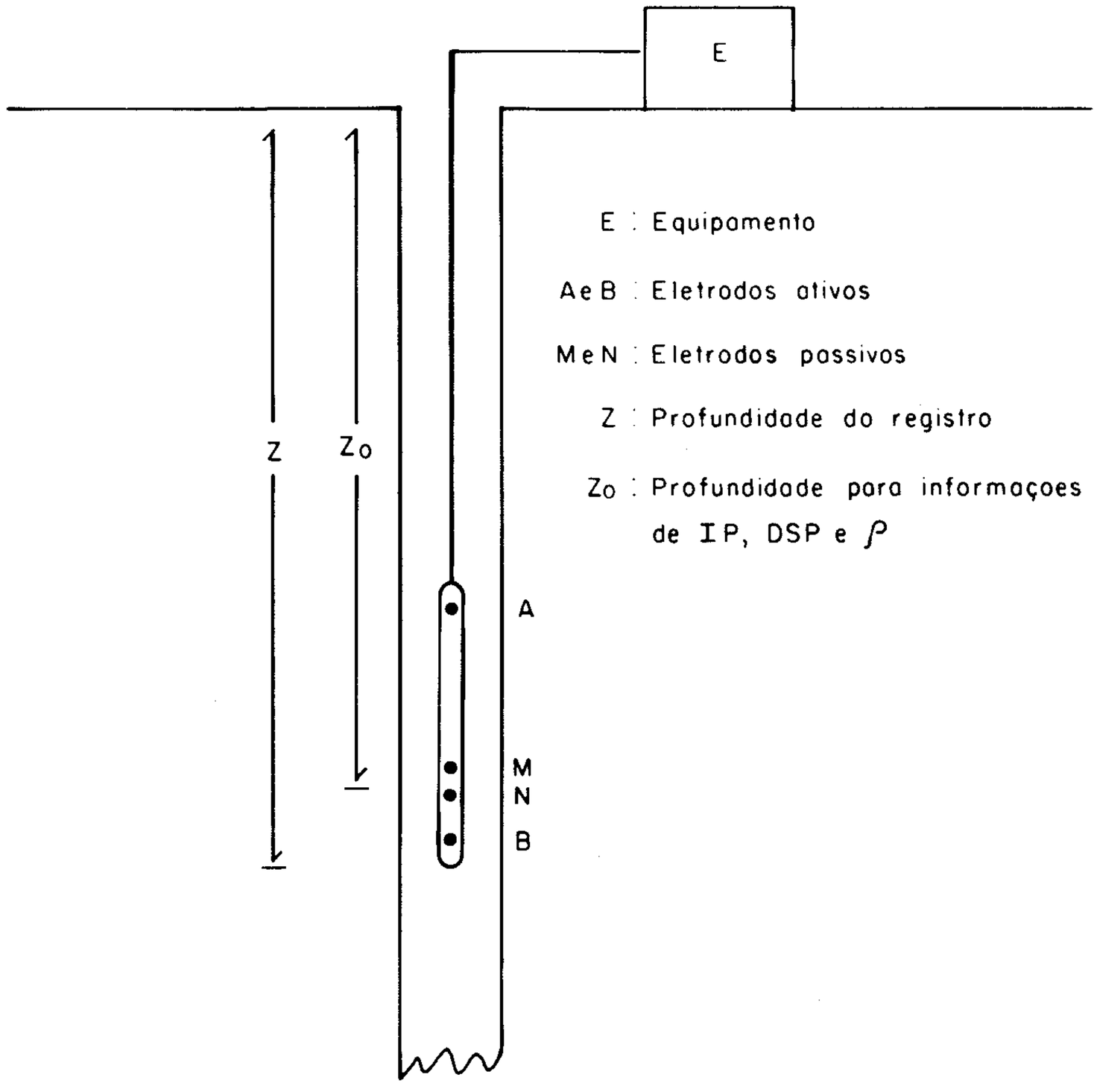


ESQUEMA PARA PERFILAGEM IP, DSP e $\rho$

FIG. 04

A informação geofísica é o próprio valor do potencial medido, refletindo informações das rochas situadas em frente ao eletrodo situado na sonda de perfilagem.

Pode-se também medir o Potencial Espontâneo Diferencial (DSP), que é a diferença de potencial entre dois pontos quaisquer. Na prática, mede-se a diferença de potencial entre 2 eletrodos situados na sonda de perfilagem (eletrodos M e N na Fig. 4). A posição da informação geofísica reflete, nesse caso, informações do ponto médio entre os dois eletrodos.

A informação DSP pode ser obtida diferenciando-se a curva do SP; do mesmo modo, a curva de SP pode ser obtida por integração da curva do DSP.

### 3.3 - Resistência

Mede-se a resistência que a terra oferece à passagem de uma corrente elétrica. O método consiste em utilizar-se dois eletrodos, um na superfície e outro na sonda de perfilagem (eletrodos A e B na Fig. 3).

O instrumento, conhecida a voltagem do sistema, mede a corrente e calcula, pela lei de ohm, a resistência R.

O valor R reflete informações das rochas situadas nas vizinhanças do eletrodo de subsuperfície.

### 3.4 - Resistividade

O método mede a variação da resistividade aparente de um sistema de eletrodos de corrente de potencial ao longo do furo de sondagem. Conforme o sistema utilizado, a configuração geométrica pode permanecer inalterada (caso em que os eletrodos de corrente e os de potencial permanecem fixos um em relação ao outro) ou variável (quando isso não acontece, como por exemplo quando um eletrodo de corrente é fixado na superfície e os demais são fixados na sonda de perfilagem).

No caso utilizado nos trabalhos, a configuração foi fixa, tipo normal, isto é, schlumberger assimétrico (Fig. 4). O valor da resistividade aparente é relacionado às rochas situadas próximas ao ponto

médio dos eletrodos de potencial.

3.5 - Polarização Induzida

O método mede o efeito da polarização induzida em relação à voltagem originalmente aplicada em um sistema de eletrodos pré-estabelecido.

Do mesmo modo que no método de Resistividade, o arranjo geométrico dos eletrodos pode ser fixo ou variável. No caso em questão, o arranjo utilizado foi o mesmo para as medições de Resistividade e, portanto, fixo.

A informação geofísica reflete, portanto, as rochas existentes entre os eletrodos de potencial.

## 4. OPERAÇÃO

A operação de perfilagem consiste na obtenção das informações geofísicas ao longo de um furo de sondagem.

Normalmente, são obtidas informações de mais de um método a cada corrida da sonda de perfilagem.

Nos testes efetuados era possível obter, de acordo com os esquemas de perfilagem mostrados nas figuras 3 e 4:

- Gama, Resistência e Potencial Espontâneo em uma mesma corrida;
- IP, Resistividade e Potencial Espontâneo Diferencial em uma mesma corrida.

Na prática, a sonda de perfilagem é introduzida no poço e descida até a profundidade máxima a ser perfilada. As medições são feitas durante a subida da sonda, quando o cabo permanece tensionado.

Durante a descida da sonda são verificados os níveis das informações geofísicas para escolha das escalas de registro.

As medições são feitas com a sonda se deslocando com velocidade constante, normalmente de 5 a 6 metros por minuto.

Para uma adequada operação de perfilagem, o furo deve estar preparado para tal, e pelo menos as seguintes providências devem ser tomadas:

- Revestimento
  Exceto o método raios gama, os demais não podem ser corridos em perfis revestidos;

- Fluído de Perfuração
  O poço deve estar preenchido por fluído de perfuração, lama ou água. Para melhorar o contato entre os eletrodos e a parede do poço, é recomendável circular água (ou lama) salgada;

- Limpeza do Poço
  Por problema de segurança, o poço deve estar completamente desobstruído. Não deve haver material gráxeo, pois isola os eletrodos;

- Inclinação
  Como a sonda de perfilagem desce por efeito da gravidade, quanto mais vertical o poço, mais fácil será a descida da sonda. Se estão limpos, não há dificuldade em perfilar poços com até $45^{o}$ com a horizontal que, entretanto, deve ser considerada a inclinação limite para tal tipo de operação.

## 5. PROFUNDIDADE

O equipamento de perfilagem efetua, além das medições geofísicas, uma medição de profundidades bastante precisa.

Nos registros, as profundidades são referidas à base da sonda de perfilagem. Como cada medida geofísica depende das posições dos eletrodos ou sensores, suas posições no registro devem ser corrigidas, nos perfis efetuados, do seguinte modo (ver Fig. 3 e 4):

| CURVA | CORREÇÃO |
|---|---|
| IP | - 40 cm |
| DSP | - 40 cm |
| ρ | - 40 cm |

| | |
|---|---|
| γ | - 50 cm |
| R | - |
| SP | - |

O valor negativo significa que a informação geofísica provêm de uma posição acima da base da sonda de perfilagem.

## 6. OPERAÇÕES EFETUADAS

Os testes foram realizados de 3 até 10 de junho, com as seguintes atividades:

Dia 3 : Chegada ao acampamento de Pojuca; conferência e testes dos equipamentos

Dia 4 : Furo 4-C12-F31 - Pojuca 31
Perfilagem γ e R

Dia 5 : Reparando equipamento e gerador

Dia 6 : Furo 4-C12-F31 - Pojuca 31
Perfilagem IP, ρ e DSP

Dia 7 : Furo SAL-3A-F68 - Salobo 68
Perfilagem R e SP
Perfilagem IP, ρ e DSP

Dia 8 : Furo SAL-3A-F69 - Salobo 69
Perfilagem IP, ρ e DSP, escala 1:400
Perfilagem IP, ρ e DSP, escala 1:100
Perfilagem γ, R e SP

Dia 9 : Furo SAL-3A-F68
Perfilagem γ , R

Dia 10: Furo 4-C12-F74 - Pojuca 74
Perfilagem γ , R e SP

Nos dias 11 e 12, o Engenheiro Eletrônico tentou reparar pane ocorrida no módulo de IP, o que não conseguiu.

| ANEXO Nº | FURO | ESCALA | | γ | R | SP | IP | P | DSP |
|---|---|---|---|---|---|---|---|---|---|
| 1 | 4-C12-F31 | 1:100 | | S | S | - | - | - | - |
| 2 | " | 1:100 | | - | - | - | S | S | S |
| 3 | SAL-3A-F68 | 1:100 | | - | S | S | - | - | - |
| 4 | " | 1:100 | | - | - | - | S | S | S |
| 5 | " | 1:100 | | S | S | - | - | - | - |
| 6 | SAL-3A-F69 | 1:400 | | - | - | - | S | S | S |
| 7 | " | 1:100 | | - | - | - | S | S | S |
| 8 | " | 1:100 | | S | S | S | - | - | - |
| 9 | 4-C12-F74 | 1:100 | | S | S | S | - | - | - |

QUADRO 1



CPRM

NE 7530 0210 0343

| FURO | ESCALA | GAMA | RESISTÊNCIA R | POTENCIAL ESPONTÂNEO SP | POLARIZAÇÃO INDUZIDA IP | RESISTIVIDADE | POTENCIAL ESPONTÂNEO DIFERENCIAL DSP |
|---|---|---|---|---|---|---|---|
| 4C-12-F31 (Pojuca - 31) | 1:100 | 465,00/1,00 | 465,50/93,00 | - | 458,50/78,00 | 458,50/78,00 | 458,50/78,00 |
| SAL-3A-F69 (Salobo - 69) | 1:100 | 369,50/1,00 | 370,00/54,00 | 370,00/54,00 | 390,50/59,00 | 390,50/59,00 | 390,50/59,00 |
| SAL-3A-F68 (Salobo - 68) | 1:100 | 257,50/1,00 | 270,00/86,00 | 270,00/86,00 | 271,00/93,50 | 271,00/93,50 | 271,00/93,50 |
| 4C-12-F74 (Pojuca - 74) | 1:100 | 545,00/1,00 | 545,50/32,00 | 545,50/32,00 | - | - | - |
| SAL-3A-F69 (Salobo - 69) | 1:400 | - | - | - | 400,00/70,00 | 400,00/70,00 | 400,70/70,00 |

QUADRO 2



CPRM

NE 7530 0210 0343

Os resultados físicos desses trabalhos estão representados nos quadros 1 e 2. O quadro 1 mostra os trechos de cada furo perfilado para cada um dos seis métodos geofísicos empregados nos testes. O quadro 2 relaciona para cada perfil anexo a este Relatório, os métodos geofísicos registrados.

## 7. RESULTADOS

O teste, apesar de alguns problemas, apresentou um saldo de vários resultados positivos.

Deve ser ressaltado que tais serviços são pioneiros no Brasil, aplicados a rochas duras. Tem-se conhecimento de tentativas anteriores realizadas no Projeto Bom Jardim, da CPRM, em Goiás e em outro da NUCLEBRÁS, ambas sem resultado. Temos notícias de que a própria DOCEGEO tentou aplicar perfilagem de IP na região de Caetê, MG, também com resultados desanimadores.

Evidentemente, não estamos considerando nesta discussão a pesquisa de urânio, rotineiramente feita com o perfil gama.

### 7.1 - Resultados Positivos

Da análise dos testes podem ser arrolados vários resultados positivos, que passamos a discutir:

#### 7.1.1 - Identificação de Zonas Anômalas

Os perfis IP, Resistência e Resistividade mostram as zonas dos poços enriquecidas em sulfetos, de forma qualitativa.

Talvez seja possível obter teores de forma semiquantitativa dos perfis de IP, como relatado por Schillinger (1).

Por outro lado, anomalias radioativas importantes podem ser (e foram) reveladas pelo perfil gama.

O fato positivo foi o aparecimento de anomalias onde era conhecida mineralização no poço Pojuca 31, cujos testemunhos já estavam descritos.

7.1.2 - Empacotamento da Seção

Todos os perfis, principalmente o perfil gama, mostram grandes trechos do poço onde a informação de fundo é uniforme, refletindo homogeneidade na seção geológica.

Utilizando-se as informações dos registros, provavelmente será possível definir associações entre os padrões dos perfis e os pacotes geológicos, como é comumente feito em rochas sedimentares.

O fato positivo foi o aparecimento nos perfis de trechos com "background" uniforme.

7.1.3 - Correlação entre Perfis

É possível efetuar correlação entre perfis, identificando as mesmas zonas perfuradas pelos poços.

Nos testes efetuados, a única correlação identificada é a das anomalias radioativas dos poços SAL-3A-F68 e F69.

Cabe salientar que dos poços perfilados, somente o poço Pojuca 31 estava descrito geologicamente. Dos poços Salobo 68 e 69, que são próximos, não se conhecia a correlação geológica para comparação.

7.1.4 - Auxílio à Descrição de Testemunhos

A própria observação dos perfis, principalmente gama e IP, mostra sua aplicabilidade como ferramenta auxiliar ao geólogo descritor dos testemunhos. Além de possibilitar uma primeira diferenciação litológica, aponta zonas enriquecidas; eventualmente, a curva de IP poderá ser calibrada para fornecer, qualitativamente, teores de sulfetos.

7.1.5 - Controle da Profundidade

Com os equipamentos do tipo utilizado, as profundidades são medidas com precisão da ordem de centímetro, permitindo controle adequado das profundidades das zonas de interesse.

7.1.6 - Definição de Escalas dos Registros

Os testes permitiram definir, para as duas áreas, escalas de trabalho para eventuais trabalhos futuros, que são:

Escala IP : 20 mV/divisão

DSP : 50 mV/divisão

Resistividade: 2 K Ω /divisão
Gama : 20 cps/divisão
Resistência : 200 Ω /divisão
SP : 100 mV/divisão

Entre as escalas verticais foram testadas as de 1:100 e 1:400. A escala 1:400 mostrou-se inadequada, como mostra o anexo 6.

O equipamento permite registro em outras escalas, 1:200 por exemplo, mas as engrenagens adequadas não estavam disponíveis.

7.1.7 - Outros

O sistema de guincho do aparelho é o ideal para ser utilizado pelo medidor de desvio do poço tipo DDI/FOTOBOR, tanto pela precisão das profundidades quanto pela imediata liberação da sonda, ao término do furo.

7.2 - Resultados Pendentes

7.2.1 - Raio de Investigação

Cada método de perfilagem recebe informações de uma zona além do poço.

Interessava aos testes estudar esse raio de investigação para o método de IP, o que seria feito no final, no poço Pojuca 31, que seria novamente perfilado com vários arranjos diferentes. Infelizmente, a pane no instrumento impossibilitou essa verificação.

Sobre o assunto é interessante considerar o trabalho de Busby & Dabek (2) sobre modelamento de anomalias de IP e Resistividade.

7.2.2 - Correlação com Geologia

Essa verificação deve ser feita, preferencialmente, pelos geólogos da área, que poderão avaliar os padrões geofísicos das diferentes rochas.

Tal aplicação dos perfis, normalmente só é alcançada com uso continuado dessas informações.

## 8. CONCLUSÕES

Os testes efetuados mostraram que perfilagem, não só de IP, mas também gama e elétrica, podem ser usadas para rochas duras, com várias aplicações.

## 9. AGRADECIMENTOS

Os autores são gratos à direção da DOCEGEO pelo apoio à realização do presente trabalho. Agradecem, também, ao pessoal de campo dessa Empresa pela lhaneza e fidalguia do tratamento dispensado e enaltecem o alto senso profissional demonstrado.

## 10. REFERÊNCIAS

(1) SCHILLINGER, A.W, 1964, "Calumet Successfully Uses I.P. Probe Underground to Boost Ore Discoveries", Mining Engineering, november.

(2) BUSBY, J.P. & DABEK, Z.K., 1986, "Resistivity and IP Modeling of the Three-Array Down-Hole Prospecting Technique", Geophysical Prospecting, Vol. 34, pp 130-140.

# RELAÇÃO DE ANEXOS

Nº 1 - Furo: 4-C12-F31

Nº 2 - Furo: 4-C12-F31

Nº 3 - Furo: SAL-3A-F68

Nº 4 - Furo: SAL-3A-F68

Nº 5 - Furo: SAL-3A-F68

Nº 6 - Furo: SAL-3A-F69

Nº 7 - Furo: SAL-3A-F69

Nº 8 - Furo: SAL-3A-F69

Nº 9 - Furo: 4-C12-F74

CPRM

# PERFILAGEM

GAMA-RESISTÊNCIA-POTENCIAL ESPONTÂNEO

CLIENTE DOCEGEO

PROJETO COBRE CARAJÁS

FURO 4 C 12 - F 31 (POJUCA - 31)

MUNICÍPIO MARABÁ ESTADO PA

| PERFIL CORRIDO | GAMA | RESISTÊNCIA | POT. ESP. |
|---|---|---|---|
| Corrida nº / Esc. Prof. | 01 1:100 | 01 1:100 | |
| Data | 05 06 86 | 05 06 86 | |
| Primeira Leitura | 465,00 m | 465,50 m | m |
| Ultima Leitura | 1,00 m | 93,00 m | m |
| Metragem Perfilada | 464,00 m | 372,50 m | m |
| Profundidade Alcançada | 465,50 m | 465,50 m | m |
| Profundidade Perfuração | m | m | m |
| Sapata Perfilagem | - m | - m | m |
| Sapata Perfuração | - m | - m | m |
| Sensibilidade | 10 cps/div. | 200 ohm/div | mV/div |
| Erro Percentual | %PE = 2 | - | |
| Constante de Tempo | TC = - s | - | |
| Vel. de Registro | 5,0 m/min | 5,0 m/min | m/min |
| Broca ou Coroa | ⌀ m | ⌀ m | ⌀ m |
| Broca ou Coroa | ⌀ m | ⌀ m | ⌀ m |
| Revestimento HW | ⌀ 82,45 m | ⌀ 82,45 m | ⌀ m |
| Revestimento BW | ⌀ 93,05 m | ⌀ 93,05 m | ⌀ m |
| Tempo de Operação | 4 h 0 min | 4 h 0 min | h min |
| Outros Perfis | I.P | RESISTIVIDADE | SP |
| Repres. do Cliente | | | |
| OPERADOR | PENIDO STELLA | | |

MOD. 107 NE 7530.0212.4161

dobrar aqui

**DADOS DA LAMA**

Natureza: ÁGUA

Dens. lb/gal — Viscosidade s — P. H. — Filtrado c.c./30min — Resist. Lama ⌀ °c — Resist. Filtrado ⌀ °c — Resist. Reboco ⌀ °c — Nivel do Fluido 30,00 m

**DADOS DO EQUIPAMENTO GAMA**

TIPO: MOUNT SOPRIS 3000 NB Nº02

SONDA Nº — Diâmetro do Cristal 1/2 pol. — Comprimento do Cristal 3/2 pol. — Tempo Morto 7,0 μseg — Fator K 4.624 x 10⁻⁶ — Dist. Detetor - Ext. Int. 50 cm

CALIBRADOR — Nº — Valor

**LOCAÇÃO DO FURO**

COORDENADAS: LTC 4 300 E/257 SW Norte Sul Leste Oeste

INCLINAÇÃO = 60° NE

ELEVAÇÃO DA B.F.: m acima abaixo Do

| SENSIBILIDADE | DE | ATÉ | % P.E. | T.C. | VEL. |
|---|---|---|---|---|---|
| cps/div | m | m | | s | m/min |

REPERFILAGENS

OBSERVAÇÃO NÃO FOI CORRIDO O PERFIL SP DE SUPERFÍCIE DEVIDO INTERFERÊNCIAS.

| | DE | | PROF. |
|---|---|---|---|
| ohm/div | DE | m A m | |
| cps/div | DE | m A m | |
| mV/div | DE | m A m | |

dobrar aqui

ED. HOUSTON, TEXAS, U.S.A. CHART NO. U1U1 MADE IN U.S.A.

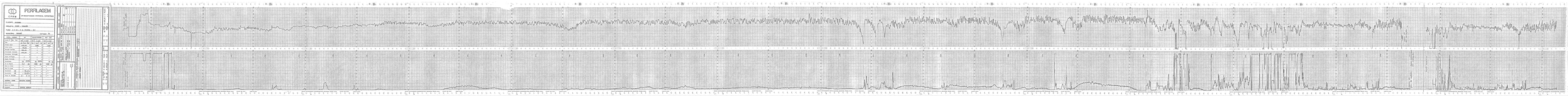
PERFILAGEM
PERFILAGEM CONTÍNUA DE POÇOS
POÇO: 2-BRSA-...-RJS
PROJETO: ...
EMPRESA: ...
DATA: ...
PROFUNDIDADE
RESISTIVIDADE
RAIO GAMA
POTENCIAL ESPONTÂNEO
CALIPER
DENSIDADE
NEUTRÃO
SÔNICO

CPRM

# PERFILAGEM

GAMA-RESISTÊNCIA-POTENCIAL ESPONTÂNEO

CLIENTE DOCEGEO

PROJETO DOCEGEO CARAJÁS

FURO FU2080 - GR

MUNICÍPIO MARABÁ ESTADO PA

| TIPOS | CORRIDO | GAMA | RESISTÊNCIA | POT. ESP. |
|---|---|---|---|---|
| Cabo nº / Ext. Prof. | | | 64 1x100 64 1x500 | |
| Data | | | 07 / 06 / 96 07 / 06 / 96 | |
| Primeira Leitura | | | 890,00 1888 | |
| Leitura Lastro | | | 80,00 " | " " |
| Retirada Perfilada | | | 194,00 " | " " |
| Profundidade Alcançada | | | 930,00 " | " " |
| Profundidade Perfurada | | | 929,56 " | " " |
| Sapata Perfilagem | | | — " | " " |
| Sapata Perfuração | | | — " | " " |
| Sensibilidade | | GR | 200 GR | 20 SP |
| Erro Parcelamal | Sim / Não | | — | — |
| Constante de Tempo | 10 s | | — | — |
| Vel. de Registro | | | 5,0 5,0 1000 10 | |
| Blindagem Cabo | SIM | | 0,00 " | " " |
| Blindagem Sonda | SIM | | 1915,04 " | " " |
| Descalibração | SIM | | 49,53 " | " " |
| Descalibração | SIM | | 89,66 " | " " |
| Tempo de Operação | | | 06 | |
| Nome Perfilador | T_P | | DOUGLAS FERREIRA | |
| Nome do Cliente | | | | |

OPERADOR

OBS: NA

DADOS DA LAMA

| | |
|---|---|
| Densidade | 1,01 |
| Viscosidade | 40 |
| Ph | 10 |
| Perda de Fluido | — |
| Reboco | — |
| Temperatura | — |
| Resistividade | — |

DADOS DO EQUIPAMENTO USADO NA PERFILAGEM

| | |
|---|---|
| Diâmetro do Furo | 4" |
| Diâmetro da Sonda | 3 1/2" |
| Tipo de Sonda | GAMA-RESISTÊNCIA-POTENCIAL ESPONTÂNEO |
| Nº de Série da Sonda | 0 |
| Tipo de Cabo | 7 CONDUTORES |
| Comprimento do Cabo | 1000 m |
| Nº de Série do Cabo | 0 |

CALIBRAÇÃO DO EQUIPAMENTO

| | |
|---|---|
| Data | 07/06/96 |
| Nº de Série da Sonda | 0 |
| Nº de Série do Cabo | 0 |
| Tipo de Calibração | PRÉ E PÓS |
| Nº de Série do Calibrador | 0 |

OBSERVAÇÕES: GRADIENTE 0,40m POTENCIAL 0,16m

ESCALA DE PROFUNDIDADE

| | |
|---|---|
| 1:100 | 1:200 |
| 1:500 | 1:1000 |

ESCALA DE GAMA

| | |
|---|---|
| 1:100 | 1:200 |
| 1:500 | 1:1000 |

ESCALA DE RESISTÊNCIA

| | |
|---|---|
| 1:100 | 1:200 |
| 1:500 | 1:1000 |

ESCALA DE POTENCIAL ESPONTÂNEO

| | |
|---|---|
| 1:100 | 1:200 |
| 1:500 | 1:1000 |

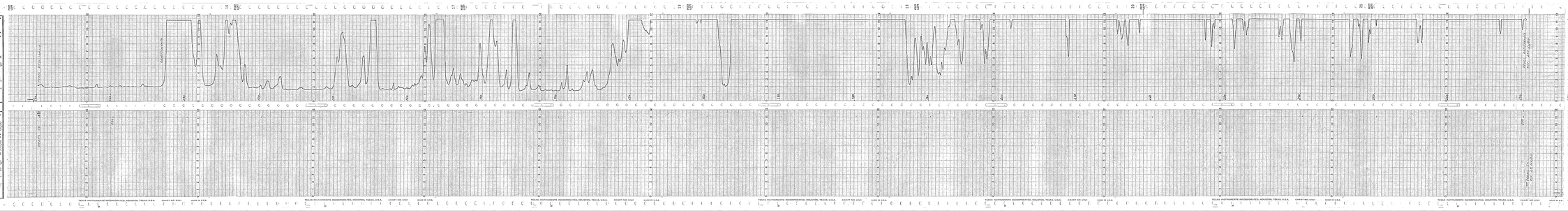

4

# PERFILAGEM

CPRM

GAMA-RESISTÊNCIA-POTENCIAL ESPONTÂNEO

CLIENTE DOCEGEO

PROJETO COBRE - CARAJÁS

FURO SALOBO - 68

MUNICÍPIO MARABÁ ESTADO PA

| PERFIL CORRIDO | GAMA | RESISTÊNCIA | POT. ESP. |
|---|---|---|---|
| Corrida nº / Esc. Prof. | 03 1:100 | 03 1:100 | |
| Data | 09 06 86 | 09 06 86 | |
| Primeira Leitura | 257,50 m | 258,00 m | m |
| Ultima Leitura | 1,00 m | 86,00 m | m |
| Metragem Perfilada | 256,50 m | 172,00 m | m |
| Profundidade Alcançada | 258,00 m | IDEM m | m |
| Profundidade Perfuração | 272,94 m | " m | m |
| Sapata Perfilagem | - m | - m | m |
| Sapata Perfuração | - m | - m | m |
| Sensibilidade | 20 cps/div. | 200 ohm/div | mV/div |
| Erro Percentual | %PE = 2 | - | |
| Constante de Tempo | TC= - s | - | |
| Vel. de Registro | 5,0 m/min | IDEM m/min | m/min |
| Broca ou Coroa NQ | a 89,62 m | a " m | a m |
| Broca ou Coroa BQ | a 272,94 m | a " m | a m |
| Revestimento NW | a 49,03 m | a " m | a m |
| Revestimento BW | a 86,66 m | a " m | a m |
| Tempo de Operação | 3 h 0 min | h " min | h min |
| Outros Perfis | I | RESISTIVIDADE | SP |
| Repres. do Cliente | | | |
| OPERADOR | PENIDO STELLA | | |

MOD. 107 NE. 7530.0212.4161

dobrar aqui

DADOS DA LAMA

Natureza: ÁGUA

Dens. lb/gal Viscosidade s

P. H. Filtrado c.c./30min

Resist. Lama a °c

Resist. Filtrado a °c

Resist. Reboco a °c

Nivel do Fluido m

DADOS DO EQUIPAMENTO GAMA

TIPO: MOUNT SOPRIS 3000 NB Nº 02

SONDA Nº 1A

Diâmetro do Cristal 1/2 pol.

Comprimento do Cristal 3/2 pol.

Tempo Morto 7,0 μseg

Fator K 4.624 x $10^{-6}$

Dist. Detetor - Ext. Int. 50 cm

CALIBRADOR Nº Valor

LOCAÇÃO DO FURO

COORDENADAS: LT 500 SE 20 W Norte Sul Leste Oeste

INCLINAÇÃO = 45° SW

ELEVAÇÃO DA B.F.: m acima / abaixo

CPRM

# PERFILAGEM

## IP-RESISTIVIDADE-POTENCIAL ESPONTÂNEO

CLIENTE DOMINIO

PROJETO CORREC - CARAJÁS

FURO FAS-IA-P-68 SALDO - 68

MUNICÍPIO MARABÁ ESTADO PA

| PERFIL CORRIDO | | IP | | RESISTIVIDADE | | POT. ESP. |
|---|---|---|---|---|---|---|
| Corrida nº | Esc. Prof. | 02 1:100 | 02 1:100 | 03 1:100 | 03 1:100 | |
| Data | | 02 06 86 | 02 06 86 | 03 06 86 | 03 06 86 | |
| Primeira Leitura | | 271,00 m | 271,00 m | 271,00 m | 271,00 m | |
| Última Leitura | | 93,50 " | " " | " " | " " | |
| Hidrogeo Perfurada | | 177,50 " | " " | " " | " " | |
| Profundidade Alcançada | | 277,50 " | " " | " " | " " | |
| Profundidade Perfuração | | 277,54 " | " " | " " | " " | |
| Suporte Portátegem | | " " | " " | " " | " " | |
| Suporte Perfuração | | " " | " " | " " | " " | |
| Sensibilidade | | 50 mV/cm | 2k ohm/cm | 50 mV/cm | | |
| Vel. de Registro | | 3 cm/min | 3 cm/min | 3 cm/min | | |
| Bloco de Cima | SO | + 89,42 " | " " | " " | " " | |
| Bloco de Cima | SO | + 272,54 " | " " | " " | " " | |
| Resistência | SW | + 89,42 " | " " | " " | " " | |
| Resistência | SW | + 86,46 " | " " | " " | " " | |
| Tempo de Corrida | | 3 h 0 min | " " | " " | " " | |

REVISADO, VISTO: ANTONIO SOUZA

Ordem Perfil: RAIMUNDO SOUZA

Registro de Direito: PERFILAGEM DE RESISTIVIDADE DE SUPERFICIE

OPERADOR: PEDRO GUEDES

LOCAÇÃO DO FURO: FAS-IA-P-68 SALDO - 68 ESTADO PA

DADOS DO EQUIPAMENTO: CAMINHÃO MERCEDES 1313 ANO 1985 UNIDADE DE PERFILAGEM MARCA ICEL MODELO PA-2000 ANO 1985 SONDA MARCA ICEL MODELO SP-2401 ANO 1985 CABO MARCA ICEL MODELO CP-2401 ANO 1985 COMPRIMENTO 1.000 m

DADOS DA LAMA: Densidade 1,03 g/cm³ Viscosidade 38 s Ph 9,5 Perda de Fluido 6,0 cm³/30 min Resistividade 1,5 ohm.m Cor Marrom

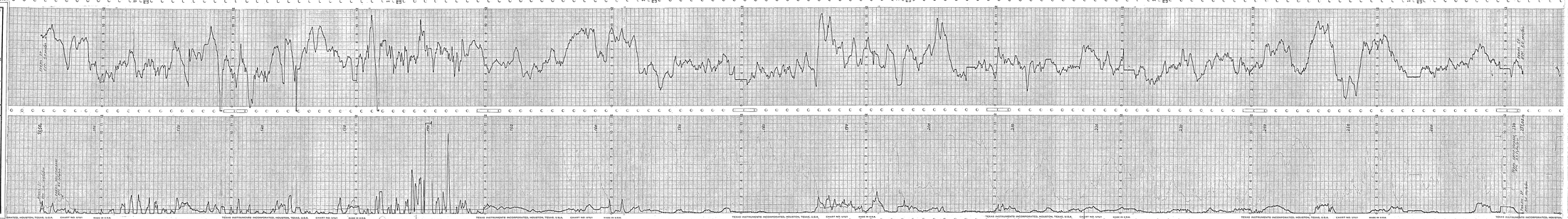

# PERFILAGEM

CPRM

IP-RESISTIVIDADE-POTENCIAL ESPONTÂNEO

CLIENTE DOCEGEO

PROJETO COBRE - CARAJÁS

FURO SAL-3A-F-69 SALOBO - 69

MUNICÍPIO MARABÁ ESTADO PA

| PERFIL CORRIDO | IP | RESISTIVIDADE | POT. ESP. |
|---|---|---|---|
| Corrida nº / Esc. Prof. | 02 1:100 | 02 1:100 | 02 1:100 |
| Data | 08 06 86 | 08 06 86 | 08 06 86 |
| Primeira Leitura | 390,50 m | IDEM m | IDEM m |
| Ultima Leitura | 59,00 m | " m | " m |
| Metragem Perfilada | 331,50 m | " m | " m |
| Profundidade Alcançada | 401,00 m | " m | " m |
| Profundidade Perfuração | 407,01 m | " m | " m |
| Sapata Perfilagem | — m | — m | — m |
| Sapata Perfuração | — m | — m | — m |
| Sensibilidade | 20 Mv/V/Div | 2k Ω/M/Div | 20 mv/div |
| Vel. de Registro | 5,0 m/min | 5,0 m/min | 5,0 m/min |
| Broca ou Coroa HQ | 53,41 m | IDEM m | IDEM m |
| Broca ou Coroa NQ | 407,01 m | " m | " m |
| Revestimento NW | 54,00 m | " m | " m |
| Revestimento | m | m | m |
| Tempo de Operação | 3 h 0 min | 3 h 0 min | 3 h 0 min |
| | | | |
| REPRES. CPRM | ANTONIO GODOY | | |
| Outros Perfis | RAIOS GAMA | RESISTÊNCIA | SP SUPERFÍCIE |
| Repres. do Cliente | | | |
| OPERADOR | PENIDO STELLA | | |

dobrar aqui

**DADOS DA LAMA**

Natureza: ÁGUA

| | | | |
|---|---|---|---|
| Dens. | lb/gal | Viscosidade | s |
| P. H. | | Filtrado | c.c. 30min |
| Resist. Lama | o | | °c |
| Resist. Filtrado | o | | °c |
| Resist. Reboco | o | | °c |
| Nivel do Fluido | | | m |

**DADOS DO EQUIPAMENTO**

TIPO: MOUNT SOPRIS 3000 NB Nº 02

MÓDULO IP - 1276

SONDA IP - 1276

COMPRIMENTO - 372,2 cm

DIÂMETRO - 4,0 cm

**LOCAÇÃO DO FURO**

COORDENADAS: LT 500 SE 100 NE

INCLINAÇÃO = 45

ELEVAÇÃO DA B.F.: m acima / abaixo

Do

OBSERVAÇÃO DISTÂNCIA ENTRE ELETRODOS TRANSMISSORES = 3,16 m

RECEPTORES = 3,46 m

ARRANJO NORMAL

| | |
|---|---|
| ← 2k Ω/M/Div | DE 390,50 m A 59,00 m |
| ← Ω/M/Div | DE m A m |
| PROF. | |
| ← 20 Mv/v/Div | DE 390,50 m A 59,00 m |
| ← 20 mV/div | DE 390,50 m A 59,00 m |

dobrar aqui

# PERFILAGEM

CPRM

IP-RESISTIVIDADE - POTENCIAL ESPONTÂNEO

CLIENTE DOCEGEO

PROJETO COBRE - CARAJÁS

FURO SAL-3A-F-69 SALOBO - 69

MUNICÍPIO MARABÁ ESTADO PA

| PERFIL CORRIDO | | IP | | | RESISTIVIDADE | | | POT. ESP. | | |
|---|---|---|---|---|---|---|---|---|---|---|
| Corrida nº | Esc. Prof. | 03 | 1:400 | | 03 | 1:400 | | 03 | 1:400 | |
| Data | | 08 | 06 | 86 | 08 | 06 | 86 | 08 | 06 | 86 |
| Primeira Leitura | | 400,00 m | | | IDEM m | | | IDEM m | | |
| Ultima Leitura | | 70,00 m | | | " m | | | " m | | |
| Metragem Perfilada | | 330,00 m | | | " m | | | " m | | |
| Profundidade Alcançada | | 401,50 m | | | " m | | | " m | | |
| Profundidade Perfuração | | 407,01 m | | | " m | | | " m | | |
| Sapata Perfilagem | | — m | | | — m | | | — m | | |
| Sapata Perfuração | | — m | | | — m | | | — m | | |
| Sensibilidade | | 50 Mv/V/Div | | | 2k Ω/M/Div | | | 20 mv/div | | |
| Vel. de Registro | | m/min | | | m/min | | | m/min | | |
| Broca ou Coroa HQ | | ø 53,41 m | | | ø IDEM m | | | ø IDEM m | | |
| Broca ou Coroa NQ | | ø407,01 m | | | ø " m | | | ø " m | | |
| Revestimento NW | | ø 54,00 m | | | ø " m | | | ø " m | | |
| Revestimento | | ø m | | | ø m | | | ø m | | |
| Tempo de Operação | | 2 h 0 min | | | h " min | | | h " min | | |
| | | | | | | | | | | |
| REPRES. CPRM | | ANTONIO GODOY | | | | | | | | |
| Outros Perfis | | | | | | | | | | |
| Repres. do Cliente | | | | | | | | | | |
| OPERADOR | | PENIDO STELLA | | | | | | | | |

dobrar aqui

## LOCAÇÃO DO FURO

COORDENADAS: LT 500 SE 100 NE

INCLINAÇÃO = 45°

ELEVAÇÃO DA B.F.: ______ m acima / abaixo

Do ______

## DADOS DO EQUIPAMENTO

TIPO: MOUNT SOPRIS 3000 NB Nº 02

MÓDULO IP - 1276

SONDA IP - 1276

COMPRIMENTO - 372,2

DIÂMETRO - 4,0

## DADOS DA LAMA

| | | | |
|---|---|---|---|
| Natureza: ÁGUA | | | |
| Dens. | Viscosidade | lb/gal | s |
| P. H. | Filtrado | | c.c./30min |
| Resist. Lama | | a | °C |
| Resist. Filtrado | | a | °C |
| Resist. Reboco | | a | °C |
| Nivel do Fluido | | | m |

OBSERVAÇÃO DISTÂNCIA ENTRE ELETRODOS TRANSMISSORES = 3,16 m

" " " RECEPTORES = 3,46 m

ARRANJO NORMAL

| | | PROF. | | |
|---|---|---|---|---|
| → \| \| ← 50 Mv/v/Div/div | DE 400,00 m A 60,00 m | | → \| \| ← 2k Ω/M/Div/div | DE 400,00 m A 60,00 m |
| → \| \| ← 20 mV/div | DE 400,00 m A 60,00 m | | → \| \| ← Ω/M/Div/div | DE m A m |

dobrar aqui

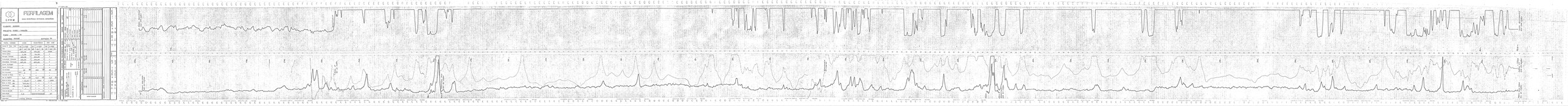
PERFILAGEM
www.weatherford.com/wireline_solutions
CLIENTE ...PETROBRAS...
POÇO ...9AOAS-1...ES...
ESTADO...ES...
Weatherford
Wireline Services
Brasil
Escala 1:200
Escala 1:1000
Escala 1:5000
Escala 1:500
Escala 1:2000
Escala 1:100
Escala 1:50
Escala 1:20
Escala 1:10
Escala 1:5
Escala 1:2
Escala 1:1
Escala 1:0.5
Escala 1:0.2
Escala 1:0.1
Escala 1:0.05
Escala 1:0.02
Escala 1:0.01
Escala 1:0.005
Escala 1:0.002
Escala 1:0.001
Escala 1:0.0005
Escala 1:0.0002
Escala 1:0.0001
Escala 1:0.00005
Escala 1:0.00002
Escala 1:0.00001
Escala 1:0.000005
Escala 1:0.000002
Escala 1:0.000001
Escala 1:0.0000005
Escala 1:0.0000002
Escala 1:0.0000001
Escala 1:0.00000005
Escala 1:0.00000002
Escala 1:0.00000001
Escala 1:0.000000005
Escala 1:0.000000002
Escala 1:0.000000001
Escala 1:0.0000000005
Escala 1:0.0000000002
Escala 1:0.0000000001
Escala 1:0.00000000005
Escala 1:0.00000000002
Escala 1:0.00000000001
Escala 1:0.000000000005
Escala 1:0.000000000002
Escala 1:0.000000000001
Escala 1:0.0000000000005
Escala 1:0.0000000000002
Escala 1:0.0000000000001
Escala 1:0.00000000000005
Escala 1:0.00000000000002
Escala 1:0.00000000000001
Escala 1:0.000000000000005
Escala 1:0.000000000000002
Escala 1:0.000000000000001
Escala 1:0.0000000000000005
Escala 1:0.0000000000000002
Escala 1:0.0000000000000001
Escala 1:0.00000000000000005
Escala 1:0.00000000000000002
Escala 1:0.00000000000000001
Escala 1:0.000000000000000005
Escala 1:0.000000000000000002
Escala 1:0.000000000000000001
Escala 1:0.0000000000000000005
Escala 1:0.0000000000000000002
Escala 1:0.0000000000000000001
Escala 1:0.00000000000000000005
Escala 1:0.00000000000000000002
Escala 1:0.00000000000000000001
Escala 1:0.000000000000000000005
Escala 1:0.000000000000000000002
Escala 1:0.000000000000000000001
Escala 1:0.0000000000000000000005
Escala 1:0.0000000000000000000002
Escala 1:0.0000000000000000000001
Escala 1:0.00000000000000000000005
Escala 1:0.00000000000000000000002
Escala 1:0.00000000000000000000001
Escala 1:0.000000000000000000000005
Escala 1:0.000000000000000000000002
Escala 1:0.000000000000000000000001
Escala 1:0.0000000000000000000000005
Escala 1:0.0000000000000000000000002
Escala 1:0.0000000000000000000000001
Escala 1:0.00000000000000000000000005
Escala 1:0.00000000000000000000000002
Escala 1:0.00000000000000000000000001
Escala 1:0.000000000000000000000000005
Escala 1:0.000000000000000000000000002
Escala 1:0.000000000000000000000000001
Escala 1:0.0000000000000000000000000005
Escala 1:0.0000000000000000000000000002
Escala 1:0.0000000000000000000000000001
Escala 1:0.00000000000000000000000000005
Escala 1:0.00000000000000000000000000002
Escala 1:0.00000000000000000000000000001
Escala 1:0.000000000000000000000000000005
Escala 1:0.000000000000000000000000000002
Escala 1:0.000000000000000000000000000001
Escala 1:0.0000000000000000000000000000005
Escala 1:0.0000000000000000000000000000002
Escala 1:0.0000000000000000000000000000001
Escala 1:0.00000000000000000000000000000005
Escala 1:0.00000000000000000000000000000002
Escala 1:0.00000000000000000000000000000001
Escala 1:0.000000000000000000000000000000005
Escala 1:0.000000000000000000000000000000002
Escala 1:0.000000000000000000000000000000001
Escala 1:0.0000000000000000000000000000000005
Escala 1:0.0000000000000000000000000000000002
Escala 1:0.0000000000000000000000000000000001
Escala 1:0.00000000000000000000000000000000005
Escala 1:0.00000000000000000000000000000000002
Escala 1:0.00000000000000000000000000000000001
Escala 1:0.000000000000000000000000000000000005
Escala 1:0.000000000000000000000000000000000002
Escala 1:0.000000000000000000000000000000000001
Escala 1:0.0000000000000000000000000000000000005
Escala 1:0.0000000000000000000000000000000000002
Escala 1:0.0000000000000000000000000000000000001
Escala 1:0.00000000000000000000000000000000000005
Escala 1:0.00000000000000000000000000000000000002
Escala 1:0.00000000000000000000000000000000000001
Escala 1:0.000000000000000000000000000000000000005
Escala 1:0.000000000000000000000000000000000000002
Escala 1:0.000000000000000000000000000000000000001
Escala 1:0.0000000000000000000000000000000000000005
Escala 1:0.0000000000000000000000000000000000000002
Escala 1:0.0000000000000000000000000000000000000001
Escala 1:0.00000000000000000000000000000000000000005
Escala 1:0.00000000000000000000000000000000000000002
Escala 1:0.00000000000000000000000000000000000000001
Escala 1:0.000000000000000000000000000000000000000005
Escala 1:0.000000000000000000000000000000000000000002
Escala 1:0.000000000000000000000000000000000000000001
Escala 1:0.0000000000000000000000000000000000000000005
Escala 1:0.0000000000000000000000000000000000000000002
Escala 1:0.0000000000000000000000000000000000000000001
Escala 1:0.00000000000000000000000000000000000000000005
Escala 1:0.00000000000000000000000000000000000000000002
Escala 1:0.00000000000000000000000000000000000000000001
Escala 1:0.000000000000000000000000000000000000000000005
Escala 1:0.000000000000000000000000000000000000000000002
Escala 1:0.000000000000000000000000000000000000000000001
Escala 1:0.0000000000000000000000000000000000000000000005
Escala 1:0.0000000000000000000000000000000000000000000002
Escala 1:0.0000000000000000000000000000000000000000000001
Escala 1:0.00000000000000000000000000000000000000000000005
Escala 1:0.00000000000000000000000000000000000000000000002
Escala 1:0.00000000000000000000000000000000000000000000001
Escala 1:0.000000000000000000000000000000000000000000000005
Escala 1:0.000000000000000000000000000000000000000000000002
Escala 1:0.000000000000000000000000000000000000000000000001
Escala 1:0.0000000000000000000000000000000000000000000000005
Escala 1:0.0000000000000000000000000000000000000000000000002
Escala 1:0.0000000000000000000000000000000000000000000000001
Escala 1:0.00000000000000000000000000000000000000000000000005
Escala 1:0.00000000000000000000000000000000000000000000000002
Escala 1:0.00000000000000000000000000000000000000000000000001
Escala 1:0.000000000000000000000000000000000000000000000000005
Escala 1:0.000000000000000000000000000000000000000000000000002
Escala 1:0.000000000000000000000000000000000000000000000000001
Escala 1:0.0000000000000000000000000000000000000000000000000005
Escala 1:0.0000000000000000000000000000000000000000000000000002
Escala 1:0.0000000000000000000000000000000000000000000000000001
Escala 1:0.00000000000000000000000000000000000000000000000000005
Escala 1:0.00000000000000000000000000000000000000000000000000002
Escala 1:0.00000000000000000000000000000000000000000000000000001
Escala 1:0.000000000000000000000000000000000000000000000000000005
Escala 1:0.000000000000000000000000000000000000000000000000000002
Escala 1:0.000000000000000000000000000000000000000000000000000001
Escala 1:0.0000000000000000000000000000000000000000000000000000005
Escala 1:0.0000000000000000000000000000000000000000000000000000002
Escala 1:0.0000000000000000000000000000000000000000000000000000001
Escala 1:0.00000000000000000000000000000000000000000000000000000005
Escala 1:0.00000000000000000000000000000000000000000000000000000002
Escala 1:0.00000000000000000000000000000000000000000000000000000001
Escala 1:0.000000000000000000000000000000000000000000000000000000005
Escala 1:0.000000000000000000000000000000000000000000000000000000002
Escala 1:0.000000000000000000000000000000000000000000000000000000001
Escala 1:0.0000000000000000000000000000000000000000000000000000000005
Escala 1:0.0000000000000000000000000000000000000000000000000000000002
Escala 1:0.0000000000000000000000000000000000000000000000000000000001
Escala 1:0.00000000000000000000000000000000000000000000000000000000005
Escala 1:0.00000000000000000000000000000000000000000000000000000000002
Escala 1:0.00000000000000000000000000000000000000000000000000000000001
Escala 1:0.000000000000000000000000000000000000000000000000000000000005
Escala 1:0.000000000000000000000000000000000000000000000000000000000002
Escala 1:0.000000000000000000000000000000000000000000000000000000000001
Escala 1:0.0000000000000000000000000000000000000000000000000000000000005
Escala 1:0.0000000000000000000000000000000000000000000000000000000000002
Escala 1:0.0000000000000000000000000000000000000000000000000000000000001
Escala 1:0.00000000000000000000000000000000000000000000000000000000000005
Escala 1:0.00000000000000000000000000000000000000000000000000000000000002
Escala 1:0.00000000000000000000000000000000000000000000000000000000000001
Escala 1:0.000000000000000000000000000000000000000000000000000000000000005
Escala 1:0.000000000000000000000000000000000000000000000000000000000000002
Escala 1:0.000000000000000000000000000000000000000000000000000000000000001
Escala 1:0.0000000000000000000000000000000000000000000000000000000000000005
Escala 1:0.0000000000000000000000000000000000000000000000000000000000000002
Escala 1:0.0000000000000000000000000000000000000000000000000000000000000001
Escala 1:0.00000000000000000000000000000000000000000000000000000000000000005
Escala 1:0.00000000000000000000000000000000000000000000000000000000000000002
Escala 1:0.00000000000000000000000000000000000000000000000000000000000000001
Escala 1:0.000000000000000000000000000000000000000000000000000000000000000005
Escala 1:0.000000000000000000000000000000000000000000000000000000000000000002
Escala 1:0.000000000000000000000000000000000000000000000000000000000000000001
Escala 1:0.0000000000000000000000000000000000000000000000000000000000000000005
Escala 1:0.0000000000000000000000000000000000000000000000000000000000000000002
Escala 1:0.0000000000000000000000000000000000000000000000000000000000000000001
Escala 1:0.00000000000000000000000000000000000000000000000000000000000000000005
Escala 1:0.00000000000000000000000000000000000000000000000000000000000000000002
Escala 1:0.00000000000000000000000000000000000000000000000000000000000000000001
Escala 1:0.000000000000000000000000000000000000000000000000000000000000000000005
Escala 1:0.000000000000000000000000000000000000000000000000000000000000000000002
Escala 1:0.000000000000000000000000000000000000000000000000000000000000000000001
Escala 1:0.0000000000000000000000000000000000000000000000000000000000000000000005
Escala 1:0.0000000000000000000000000000000000000000000000000000000000000000000002
Escala 1:0.0000000000000000000000000000000000000000000000000000000000000000000001
Escala 1:0.00000000000000000000000000000000000000000000000000000000000000000000005
Escala 1:0.00000000000000000000000000000000000000000000000000000000000000000000002
Escala 1:0.00000000000000000000000000000000000000000000000000000000000000000000001
Escala 1:0.000000000000000000000000000000000000000000000000000000000000000000000005
Escala 1:0.000000000000000000000000000000000000000000000000000000000000000000000002
Escala 1:0.000000000000000000000000000000000000000000000000000000000000000000000001
Escala 1:0.0000000000000000000000000000000000000000000000000000000000000000000000005
Escala 1:0.0000000000000000000000000000000000000000000000000000000000000000000000002
Escala 1:0.0000000000000000000000000000000000000000000000000000000000000000000000001
Escala 1:0.00000000000000000000000000000000000000000000000000000000000000000000000005
Escala 1:0.00000000000000000000000000000000000000000000000000000000000000000000000002
Escala 1:0.00000000000000000000000000000000000000000000000000000000000000000000000001
Escala 1:0.000000000000000000000000000000000000000000000000000000000000000000000000005
Escala 1:0.000000000000000000000000000000000000000000000000000000000000000000000000002
Escala 1:0.000000000000000000000000000000000000000000000000000000000000000000000000001
Escala 1:0.0000000000000000000000000000000000000000000000000000000000000000000000000005
Escala 1:0.0000000000000000000000000000000000000000000000000000000000000000000000000002
Escala 1:0.0000000000000000000000000000000000000000000000000000000000000000000000000001
Escala 1:0.00000000000000000000000000000000000000000000000000000000000000000000000000005
Escala 1:0.00000000000000000000000000000000000000000000000000000000000000000000000000002
Escala 1:0.00000000000000000000000000000000000000000000000000000000000000000000000000001
Escala 1:0.000000000000000000000000000000000000000000000000000000000000000000000000000005
Escala 1:0.000000000000000000000000000000000000000000000000000000000000000000000000000002
Escala 1:0.000000000000000000000000000000000000000000000000000000000000000000000000000001
Escala 1:0.0000000000000000000000000000000000000000000000000000000000000000000000000000005
Escala 1:0.0000000000000000000000000000000000000000000000000000000000000000000000000000002
Escala 1:0.0000000000000000000000000000000000000000000000000000000000000000000000000000001
Escala 1:0.00000000000000000000000000000000000000000000000000000000000000000000000000000005
Escala 1:0.00000000000000000000000000000000000000000000000000000000000000000000000000000002
Escala 1:0.00000000000000000000000000000000000000000000000000000000000000000000000000000001
Escala 1:0.000000000000000000000000000000000000000000000000000000000000000000000000000000005
Escala 1:0.000000000000000000000000000000000000000000000000000000000000000000000000000000002
Escala 1:0.000000000000000000000000000000000000000000000000000000000000000000000000000000001
Escala 1:0.0000000000000000000000000000000000000000000000000000000000000000000000000000000005
Escala 1:0.0000000000000000000000000000000000000000000000000000000000000000000000000000000002
Escala 1:0.0000000000000000000000000000000000000000000000000000000000000000000000000000000001
Escala 1:0.00000000000000000000000000000000000000000000000000000000000000000000000000000000005
Escala 1:0.00000000000000000000000000000000000000000000000000000000000000000000000000000000002
Escala 1:0.00000000000000000000000000000000000000000000000000000000000000000000000000000000001
Escala 1:0.000000000000000000000000000000000000000000000000000000000000000000000000000000000005
Escala 1:0.000000000000000000000000000000000000000000000000000000000000000000000000000000000002
Escala 1:0.000000000000000000000000000000000000000000000000000000000000000000000000000000000001
Escala 1:0.0000000000000000000000000000000000000000000000000000000000000000000000000000000000005
Escala 1:0.0000000000000000000000000000000000000000000000000000000000000000000000000000000000002
Escala 1:0.0000000000000000000000000000000000000000000000000000000000000000000000000000000000001
Escala 1:0.00000000000000000000000000000000000000000000000000000000000000000000000000000000000005
Escala 1:0.00000000000000000000000000000000000000000000000000000000000000000000000000000000000002
Escala 1:0.00000000000000000000000000000000000000000000000000000000000000000000000000000000000001
Escala 1:0.000000000000000000000000000000000000000000000000000000000000000000000000000000000000005
Escala 1:0.000000000000000000000000000000000000000000000000000000000000000000000000000000000000002
Escala 1:0.000000000000000000000000000000000000000000000000000000000000000000000000000000000000001
Escala 1:0.0000000000000000000000000000000000000000000000000000000000000000000000000000000000000005
Escala 1:0.0000000000000000000000000000000000000000000000000000000000000000000000000000000000000002
Escala 1:0.0000000000000000000000000000000000000000000000000000000000000000000000000000000000000001
Escala 1:0.00000000000000000000000000000000000000000000000000000000000000000000000000000000000000005
Escala 1:0.00000000000000000000000000000000000000000000000000000000000000000000000000000000000000002
Escala 1:0.00000000000000000000000000000000000000000000000000000000000000000000000000000000000000001
Escala 1:0.000000000000000000000000000000000000000000000000000000000000000000000000000000000000000005
Escala 1:0.000000000000000000000000000000000000000000000000000000000000000000000000000000000000000002
Escala 1:0.000000000000000000000000000000000000000000000000000000000000000000000000000000000000000001
Escala 1:0.0000000000000000000000000000000000000000000000000000000000000000000000000000000000000000005
Escala 1:0.0000000000000000000000000000000000000000000000000000000000000000000000000000000000000000002
Escala 1:0.0000000000000000000000000000000000000000000000000000000000000000000000000000000000000000001
Escala 1:0.00000000000000000000000000000000000000000000000000000000000000000000000000000000000000000005
Escala 1:0.00000000000000000000000000000000000000000000000000000000000000000000000000000000000000000002
Escala 1:0.00000000000000000000000000000000000000000000000000000000000000000000000000000000000000000001
Escala 1:0.000000000000000000000000000000000000000000000000000000000000000000000000000000000000000000005
Escala 1:0.000000000000000000000000000000000000000000000000000000000000000000000000000000000000000000002
Escala 1:0.000000000000000000000000000000000000000000000000000000000000000000000000000000000000000000001
Escala 1:0.0000000000000000000000000000000000000000000000000000000000000000000000000000000000000000000005
Escala 1:0.0000000000000000000000000000000000000000000000000000000000000000000000000000000000000000000002
Escala 1:0.0000000000000000000000000000000000000000000000000000000000000000000000000000000000000000000001
Escala 1:0.00000000000000000000000000000000000000000000000000000000000000000000000000000000000000000000005
Escala 1:0.00000000000000000000000000000000000000000000000000000000000000000000000000000000000000000000002
Escala 1:0.00000000000000000000000000000000000000000000000000000000000000000000000000000000000000000000001
Escala 1:0.000000000000000000000000000000000000000000000000000000000000000000000000000000000000000000000005
Escala 1:0.000000000000000000000000000000000000000000000000000000000000000000000000000000000000000000000002
Escala 1:0.000000000000000000000000000000000000000000000000000000000000000000000000000000000000000000000001
Escala 1:0.0000000000000000000000000000000000000000000000000000000000000000000000000000000000000000000000005
Escala 1:0.0000000000000000000000000000000000000000000000000000000000000000000000000000000000000000000000002
Escala 1:0.0000000000000000000000000000000000000000000000000000000000000000000000000000000000000000000000001
Escala 1:0.00000000000000000000000000000000000000000000000000000000000000000000000000000000000000000000000005
Escala 1:0.00000000000000000000000000000000000000000000000000000000000000000000000000000000000000000000000002
Escala 1:0.00000000000000000000000000000000000000000000000000000000000000000000000000000000000000000000000001
Escala 1:0.000000000000000000000000000000000000000000000000000000000000000000000000000000000000000000000000005
Escala 1:0.000000000000000000000000000000000000000000000000000000000000000000000000000000000000000000000000002
Escala 1:0.000000000000000000000000000000000000000000000000000000000000000000000000000000000000000000000000001
Escala 1:0.0000000000000000000000000000000000000000000000000000000000000000000000000000000000000000000000000005
Escala 1:0.0000000000000000000000000000000000000000000000000000000000000000000000000000000000000000000000000002
Escala 1:0.0000000000000000000000000000000000000000000000000000000000000000000000000000000000000000000000000001
Escala 1:0.00000000000000000000000000000000000000000000000000000000000000000000000000000000000000000000000000005
Escala 1:0.00000000000000000000000000000000000000000000000000000000000000000000000000000000000000000000000000002
Escala 1:0.00000000000000000000000000000000000000000000000000000000000000000000000000000000000000000000000000001
Escala 1:0.000000000000000000000000000000000000000000000000000000000000000000000000000000000000000000000000000005
Escala 1:0.000000000000000000000000000000000000000000000000000000000000000000000000000000000000000000000000000002
Escala 1:0.000000000000000000000000000000000000000000000000000000000000000000000000000000000000000000000000000001
Escala 1:0.0000000000000000000000000000000000000000000000000000000000000000000000000000000000000000000000000000005
Escala 1:0.0000000000000000000000000000000000000000000000000000000000000000000000000000000000000000000000000000002
Escala 1:0.0000000000000000000000000000000000000000000000000000000000000000000000000000000000000000000000000000001
Escala 1:0.00000000000000000000000000000000000000000000000000000000000000000000000000000000000000000000000000000005
Escala 1:0.00000000000000000000000000000000000000000000000000000000000000000000000000000000000000000000000000000002
Escala 1:0.00000000000000000000000000000000000000000000000000000000000000000000000000000000000000000000000000000001
Escala 1:0.000000000000000000000000000000000000000000000000000000000000000000000000000000000000000000000000000000005
Escala 1:0.000000000000000000000000000000000000000000000000000000000000000000000000000000000000000000000000000000002
Escala 1:0.000000000000000000000000000000000000000000000000000000000000000000000000000000000000000000000000000000001
Escala 1:0.0000000000000000000000000000000000000000000000000000000000000000000000000000000000000000000000000000000005
Escala 1:0.0000000000000000000000000000000000000000000000000000000000000000000000000000000000000000000000000000000002
Escala 1:0.0000000000000000000000000000000000000000000000000000000000000000000000000000000000000000000000000000000001
Escala 1:0.00000000000000000000000000000000000000000000000000000000000000000000000000000000000000000000000000000000005
Escala 1:0.00000000000000000000000000000000000000000000000000000000000000000000000000000000000000000000000000000000002
Escala 1:0.00000000000000000000000000000000000000000000000000000000000000000000000000000000000000000000000000000000001
Escala 1:0.000000000000000000000000000000000000000000000000000000000000000000000000000000000000000000000000000000000005
Escala 1:0.000000000000000000000000000000000000000000000000000000000000000000000000000000000000000000000000000000000002
Escala 1:0.000000000000000000000000000000000000000000000000000000000000000000000000000000000000000000000000000000000001
Escala 1:0.0000000000000000000000000000000000000000000000000000000000000000000000000000000000000000000000000000000000005
Escala 1:0.0000000000000000000000000000000000000000000000000000000000000000000000000000000000000000000000000000000000002
Escala 1:0.0000000000000000000000000000000000000000000000000000000000000000000000000000000000000000000000000000000000001
Escala 1:0.00000000000000000000000000000000000000000000000000000000000000000000000000000000000000000000000000000000000005
Escala 1:0.00000000000000000000000000000000000000000000000000000000000000000000000000000000000000000000000000000000000002
Escala 1:0.00000000000000000000000000000000000000000000000000000000000000000000000000000000000000000000000000000000000001
Escala 1:0.000000000000000000000000000000000000000000000000000000000000000000000000000000000000000000000000000000000000005
Escala 1:0.000000000000000000000000000000000000000000000000000000000000000000000000000000000000000000000000000000000000002
Escala 1:0.000000000000000000000000000000000000000000000000000000000000000000000000000000000000000000000000000000000000001
Escala 1:0.0000000000000000000000000000000000000000000000000000000000000000000000000000000000000000000000000000000000000005
Escala 1:0.0000000000000000000000000000000000000000000000000000000000000000000000000000000000000000000000000000000000000002
Escala 1:0.0000000000000000000000000000000000000000000000000000000000000000000000000000000000000000000000000000000000000001
Escala 1:0.00000000000000000000000000000000000000000000000000000000000000000000000000000000000000000000000000000000000000005
Escala 1:0.00000000000000000000000000000000000000000000000000000000000000000000000000000000000000000000000000000000000000002
Escala 1:0.00000000000000000000000000000000000000000000000000000000000000000000000000000000000000000000000000000000000000001
Escala 1:0.000000000000000000000000000000000000000000000000000000000000000000000000000000000000000000000000000000000000000005
Escala 1:0.000000000000000000000000000000000000000000000000000000000000000000000000000000000000000000000000000000000000000002
Escala 1:0.000000000000000000000000000000000000000000000000000000000000000000000000000000000000000000000000000000000000000001
Escala 1:0.0000000000000000000000000000000000000000000000000000000000000000000000000000000000000000000000000000000000000000005
Escala 1:0.0000000000000000000000000000000000000000000000000000000000000000000000000000000000000000000000000000000000000000002
Escala 1:0.0000000000000000000000000000000000000000000000000000000000000000000000000000000000000000000000000000000000000000001
Escala 1:0.00000000000000000000000000000000000000000000000000000000000000000000000000000000000000000000000000000000000000000005
Escala 1:0.00000000000000000000000000000000000000000000000000000000000000000000000000000000000000000000000000000000000000000002
Escala 1:0.00000000000000000000000000000000000000000000000000000000000000000000000000000000000000000000000000000000000000000001
Escala 1:0.000000000000000000000000000000000000000000000000000000000000000000000000000000000000000000000000000000000000000000005
Escala 1:0.000000000000000000000000000000000000000000000000000000000000000000000000000000000000000000000000000000000000000000002
Escala 1:0.000000000000000000000000000000000000000000000000000000000000000000000000000000000000000000000000000000000000000000001
Escala 1:0.0000000000000000000000000000000000000000000000000000000000000000000000000000000000000000000000000000000000000000000005
Escala 1:0.0000000000000000000000000000000000000000000000000000000000000000000000000000000000000000000000000000000000000000000002
Escala 1:0.0000000000000000000000000000000000000000000000000000000000000000000000000000000000000000000000000000000000000000000001
Escala 1:0.00000000000000000000000000000000000000000000000000000000000000000000000000000000000000000000000000000000000000000000005
Escala 1:0.00000000000000000000000000000000000000000000000000000000000000000000000000000000000000000000000000000000000000000000002
Escala 1:0.00000000000000000000000000000000000000000000000000000000000000000000000000000000000000000000000000000000000000000000001
Escala 1:0.000000000000000000000000000000000000000000000000000000000000000000000000000000000000000000000000000000000000000000000005
Escala 1:0.000000000000000000000000000000000000000000000000000000000000000000000000000000000000000000000000000000000000000000000002
Escala 1:0.000000000000000000000000000000000000000000000000000000000000000000000000000000000000000000000000000000000000000000000001
Escala 1:0.0000000000000000000000000000000000000000000000000000000000000000000000000000000000000000000000000000000000000000000000005
Escala 1:0.0000000000000000000000000000000000000000000000000000000000000000000000000000000000000000000000000000000000000000000000002
Escala 1:0.0000000000000000000000000000000000000000000000000000000000000000000000000000000000000000000000000000000000000000000000001
Escala 1:0.00000000000000000000000000000000000000000000000000000000000000000000000000000000000000000000000000000000000000000000000005
Escala 1:0.00000000000000000000000000000000000000000000000000000000000000000000000000000000000000000000000000000000000000000000000002
Escala 1:0.00000000000000000000000000000000000000000000000000000000000000000000000000000000000000000000000000000000000000000000000001
Escala 1:0.000000000000000000000000000000000000000000000000000000000000000000000000000000000000000000000000000000000000000000000000005
Escala 1:0.000000000000000000000000000000000000000000000000000000000000000000000000000000000000000000000000000000000000000000000000002
Escala 1:0.000000000000000000000000000000000000000000000000000000000000000000000000000000000000000000000000000000000000000000000000001
Escala 1:0.0000000000000000000000000000000000000000000000000000000000000000000000000000000000000000000000000000000000000000000000000005
Escala 1:0.0000000000000000000000000000000000000000000000000000000000000000000000000000000000000000000000000000000000000000000000000002
Escala 1:0.0000000000000000000000000000000000000000000000000000000000000000000000000000000000000000000000000000000000000000000000000001
Escala 1:0.00000000000000000000000000000000000000000000000000000000000000000000000000000000000000000000000000000000000000000000000000005
Escala 1:0.00000000000000000000000000000000000000000000000000000000000000000000000000000000000000000000000000000000000000000000000000002
Escala 1:0.00000000000000000000000000000000000000000000000000000000000000000000000000000000000000000000000000000000000000000000000000001
Escala 1:0.000000000000000000000000000000000000000000000000000000000000000000000000000000000000000000000000000000000000000000000000000005
Escala 1:0.000000000000000000000000000000000000000000000000000000000000000000000000000000000000000000000000000000000000000000000000000002
Escala 1:0.000000000000000000000000000000000000000000000000000000000000000000000000000000000000000000000000000000000000000000000000000001
Escala 1:0.0000000000000000000000000000000000000000000000000000000000000000000000000000000000000000000000000000000000000000000000000000005
Escala 1:0.0000000000000000000000000000000000000000000000000000000000000000000000000000000000000000000000000000000000000000000000000000002
Escala 1:0.0000000000000000000000000000000000000000000000000000000000000000000000000000000000000000000000000000000000000000000000000000001
Escala 1:0.00000000000000000000000000000000000000000000000000000000000000000000000000000000000000000000000000000000000000000000000000000005
Escala 1:0.00000000000000000000000000000000000000000000000000000000000000000000000000000000000000000000000000000000000000000000000000000002
Escala 1:0.00000000000000000000000000000000000000000000000000000000000000000000000000000000000000000000000000000000000000000000000000000001
Escala 1:0.000000000000000000000000000000000000000000000000000000000000000000000000000000000000000000000000000000000000000000000000000000005
Escala 1:0.000000000000000000000000000000000000000000000000000000000000000000000000000000000000000000000000000000000000000000000000000000002
Escala 1:0.000000000000000000000000000000000000000000000000000000000000000000000000000000000000000000000000000000000000000000000000000000001
Escala 1:0.0000000000000000000000000000000000000000000000000000000000000000000000000000000000000000000000000000000000000000000000000000000005
Escala 1:0.0000000000000000000000000000000000000000000000000000000000000000000000000000000000000000000000000000000000000000000000000000000002
Escala 1:0.0000000000000000000000000000000000000000000000000000000000000000000000000000000000000000000000000000000000000000000000000000000001
Escala 1:0.00000000000000000000000000000000000000000000000000000000000000000000000000000000000000000000000000000000000000000000000000000000005
Escala 1:0.00000000000000000000000000000000000000000000000000000000000000000000000000000000000000000000000000000000000000000000000000000000002
Escala 1:0.00000000000000000000000000000000000000000000000000000000000000000000000000000000000000000000000000000000000000000000000000000000001
Escala 1:0.000000000000000000000000000000000000000000000000000000000000000000000000000000000000000000000000000000000000000000000000000000000005
Escala 1:0.000000000000000000000000000000000000000000000000000000000000000000000000000000000000000000000000000000000000000000000000000000000002
Escala 1:0.000000000000000000000000000000000000000000000000000000000000000000000000000000000000000000000000000000000000000000000000000000000001
Escala 1:0.0000000000000000000000000000000000000000000000000000000000000000000000000000000000000000000000000000000000000000000000000000000000005
Escala 1:0.0000000000000000000000000000000000000000000000000000000000000000000000000000000000000000000000000000000000000000000000000000000000002
Escala 1:0.0000000000000000000000000000000000000000000000000000000000000000000000000000000000000000000000000000000000000000000000000000000000001
Escala 1:0.00000000000000000000000000000000000000000000000000000000000000000000000000000000000000000000000000000000000000000000000000000000000005
Escala 1:0.00000000000000000000000000000000000000000000000000000000000000000000000000000000000000000000000000000000000000000000000000000000000002
Escala 1:0.00000000000000000000000000000000000000000000000000000000000000000000000000000000000000000000000000000000000000000000000000000000000001
Escala 1:0.000000000000000000000000000000000000000000000000000000000000000000000000000000000000000000000000000000000000000000000000000000000000005
Escala 1:0.000000000000000000000000000000000000000000000000000000000000000000000000000000000000000000000000000000000000000000000000000000000000002
Escala 1:0.000000000000000000000000000000000000000000000000000000000000000000000000000000000000000000000000000000000000000000000000000000000000001
Escala 1:0.0000000000000000000000000000000000000000000000000000000000000000000000000000000000000000000000000000000000000000000000000000000000000005
Escala 1:0.0000000000000000000000000000000000000000000000000000000000000000000000000000000000000000000000000000000000000000000000000000000000000002
Escala 1:0.0000000000000000000000000000000000000000000000000000000000000000000000000000000000000000000000000000000000000000000000000000000000000001
Escala 1:0.00000000000000000000000000000000000000000000000000000000000000000000000000000000000000000000000000000000000000000000000000000000000000005
Escala 1:0.00000000000000000000000000000000000000000000000000000000000000000000000000000000000000000000000000000000000000000000000000000000000000002
Escala 1:0.00000000000000000000000000000000000000000000000000000000000000000000000000000000000000000000000000000000000000000000000000000000000000001
Escala 1:0.000000000000000000000000000000000000000000000000000000000000000000000000000000000000000000000000000000000000000000000000000000000000000005
Escala 1:0.000000000000000000000000000000000000000000000000000000000000000000000000000000000000000000000000000000000000000000000000000000000000000002
Escala 1:0.000000000000000000000000000000000000000000000000000000000000000000000000000000000000000000000000000000000000000000000000000000000000000001
Escala 1:0.0000000000000000000000000000000000000000000000000000000000000000000000000000000000000000000000000000000000000000000000000000000000000000005
Escala 1:0.0000000000000000000000000000000000000000000000000000000000000000000000000000000000000000000000000000000000000000000000000000000000000000002
Escala 1:0.0000000000000000000000000000000000000000000000000000000000000000000000000000000000000000000000000000000000000000000000000000000000000000001
Escala 1:0.00000000000000000000000000000000000000000000000000000000000000000000000000000000000000000000000000000000000000000000000000000000000000000005
Escala 1:0.00000000000000000000000000000000000000000000000000000000000000000000000000000000000000000000000000000000000000000000000000000000000000000002
Escala 1:0.00000000000000000000000000000000000000000000000000000000000000000000000000000000000000000000000000000000000000000000000000000000000000000001
Escala 1:0.000000000000000000000000000000000000000000000000000000000000000000000000000000000000000000000000000000000000000000000000000000000000000000005
Escala 1:0.000000000000000000000000000000000000000000000000000000000000000000000000000000000000000000000000000000000000000000000000000000000000000000002
Escala 1:0.000000000000000000000000000000000000000000000000000000000000000000000000000000000000000000000000000000000000000000000000000000000000000000001
Escala 1:0.0000000000000000000000000000000000000000000000000000000000000000000000000000000000000000000000000000000000000000000000000000000000000000000005
Escala 1:0.0000000000000000000000000000000000000000000000000000000000000000000000000000000000000000000000000000000000000000000000000000000000000000000002
Escala 1:0.0000000000000000000000000000000000000000000000000000000000000000000000000000000000000000000000000000000000000000000000000000000000000000000001
Escala 1:0.00000000000000000000000000000000000000000000000000000000000000000000000000000000000000000000000000000000000000000000000000000000000000000000005
Escala 1:0.00000000000000000000000000000000000000000000000000000000000000000000000000000000000000000000000000000000000000000000000000000000000000000000002
Escala 1:0.00000000000000000000000000000000000000000000000000000000000000000000000000000000000000000000000000000000000000000000000000000000000000000000001
Escala 1:0.000000000000000000000000000000000000000000000000000000000000000000000000000000000000000000000000000000000000000000000000000000000000000000000005
Escala 1:0.000000000000000000000000000000000000000000000000000000000000000000000000000000000000000000000000000000000000000000000000000000000000000000000002
Escala 1:0.000000000000000000000000000000000000000000000000000000000000000000000000000000000000000000000000000000000000000000000000000000000000000000000001
Escala 1:0.0000000000000000000000000000000000000000000000000000000000000000000000000000000000000000000000000000000000000000000000000000000000000000000000005
Escala 1:0.0000000000000000000000000000000000000000000000000000000000000000000000000000000000000000000000000000000000000000000000000000000000000000000000002
Escala 1:0.0000000000000000000000000000000000000000000000000000000000000000000000000000000000000000000000000000000000000000000000000000000000000000000000001
Escala 1:0.00000000000000000000000000000000000000000000000000000000000000000000000000000000000000000000000000000000000000000000000000000000000000000000000005
Escala 1:0.00000000000000000000000000000000000000000000000000000000000000000000000000000000000000000000000000000000000000000000000000000000000000000000000002
Escala 1:0.00000000000000000000000000000000000000000000000000000000000000000000000000000000000000000000000000000000000000000000000000000000000000000000000001
Escala 1:0.000000000000000000000000000000000000000000000000000000000000000000000000000000000000000000000000000000000000000000000000000000000000000000000000005
Escala 1:0.000000000000000000000000000000000000000000000000000000000000000000000000000000000000000000000000000000000000000000000000000000000000000000000000002
Escala 1:0.000000000000000000000000000000000000000000000000000000000000000000000000000000000000000000000000000000000000000000000000000000000000000000000000001
Escala 1:0.0000000000000000000000000000000000000000000000000000000000000000000000000000000000000000000000000000000000000000000000000000000000000000000000000005
Escala 1:0.0000000000000000000000000000000000000000000000000000000000000000000000000000000000000000000000000000000000000000000000000000000000000000000000000002
Escala 1:0.0000000000000000000000000000000000000000000000000000000000000000000000000000000000000000000000000000000000000000000000000000000000000000000000000001
Escala 1:0.00000000000000000000000000000000000000000000000000000000000000000000000000000000000000000000000000000000000000000000000000000000000000000000000000005
Escala 1:0.00000000000000000000000000000000000000000000000000000000000000000000000000000000000000000000000000000000000000000000000000000000000000000000000000002
Escala 1:0.00000000000000000000000000000000000000000000000000000000000000000000000000000000000000000000000000000000000000000000000000000000000000000000000000001
Escala 1:0.000000000000000000000000000000000000000000000000000000000000000000000000000000000000000000000000000000000000000000000000000000000000000000000000000005
Escala 1:0.000000000000000000000000000000000000000000000000000000000000000000000000000000000000000000000000000000000000000000000000000000000000000000000000000002
Escala 1:0.000000000000000000000000000000000000000000000000000000000000000000000000000000000000000000000000000000000000000000000000000000000000000000000000000001
Escala 1:0.0000000000000000000000000000000000000000000000000000000000000000000000000000000000000000000000000000000000000000000000000000000000000000000000000000005
Escala 1:0.0000000000000000000000000000000000000000000000000000000000000000000000000000000000000000000000000000000000000000000000000000000000000000000000000000002
Escala 1:0.0000000000000000000000000000000000000000000000000000000000000000000000000000000000000000000000000000000000000000000000000000000000000000000000000000001
Escala 1:0.00000000000000000000000000000000000000000000000000000000000000000000000000000000000000000000000000000000000000000000000000000000000

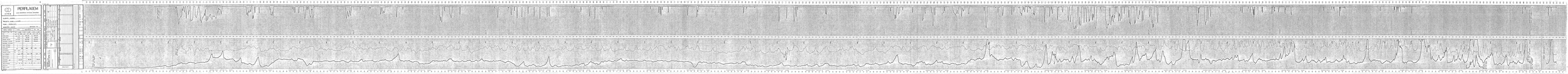
PERFILAGEM
Poço: 1-ANP-1-RJS
Data: 29/08/2013
Empresa: Schlumberger
Equipamento: MAXIS 500
Unidade: 5
Operador: Fernando Silva
Engenheiro: Ricardo Mendes
Intervalo: 1200 - 3450 m
Fluido: Lama Base Água
Densidade: 1.12 g/cm³
Viscosidade: 42 s
pH: 9.2
Cloretos: 18000 mg/L
Temperatura: 78 °C
Pressão: 3450 psi
Tipo de Perfil: Resistividade
Escala: 1:200
Profundidade: m
Gamma Ray: API
Resistividade: ohm.m
Densidade: g/cm³
Neutrão: %
Caliper: in
Observações: Perfil gravado após circulação completa do poço.